ALTAIR
Technical Equipment
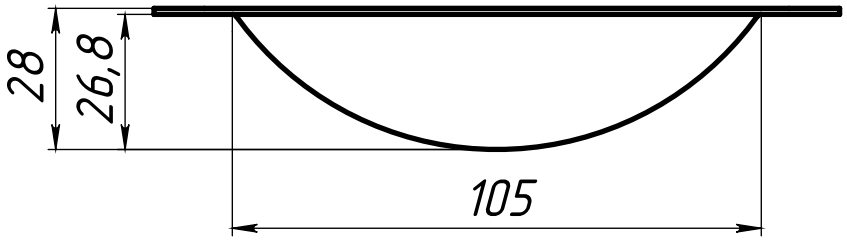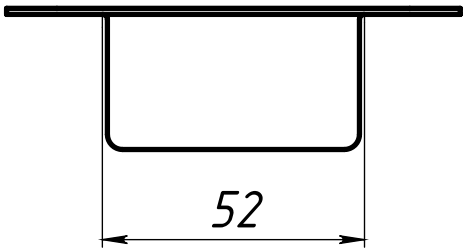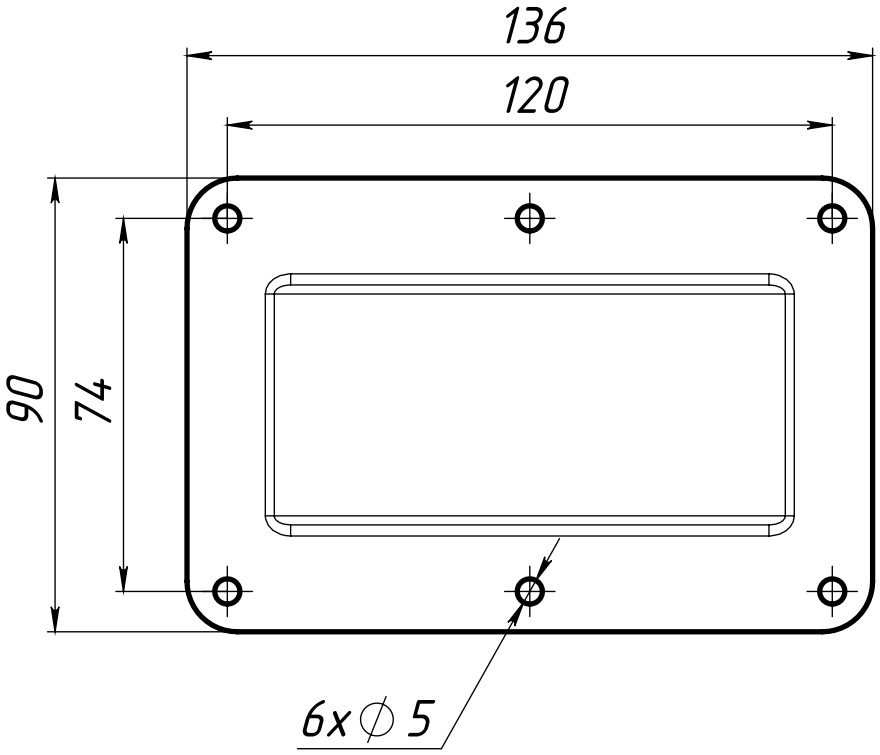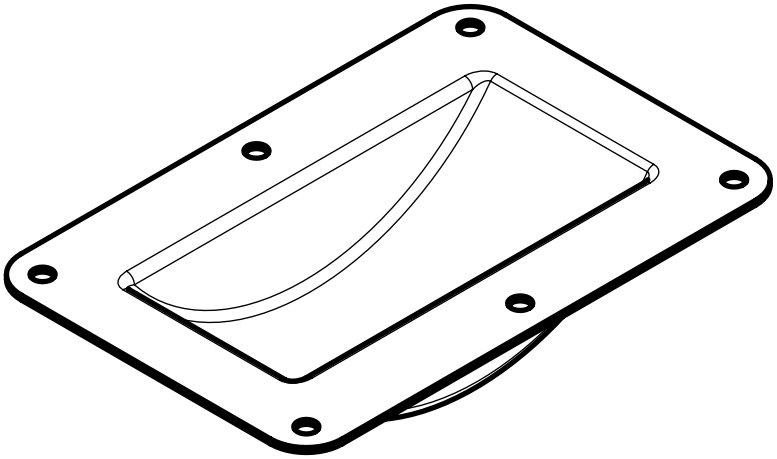
D7101