ALTAIR
Technical Equipment
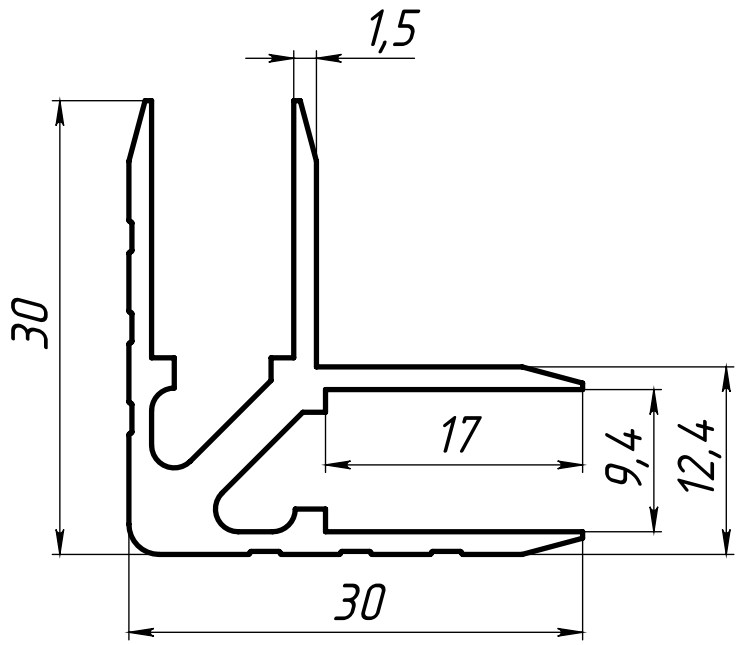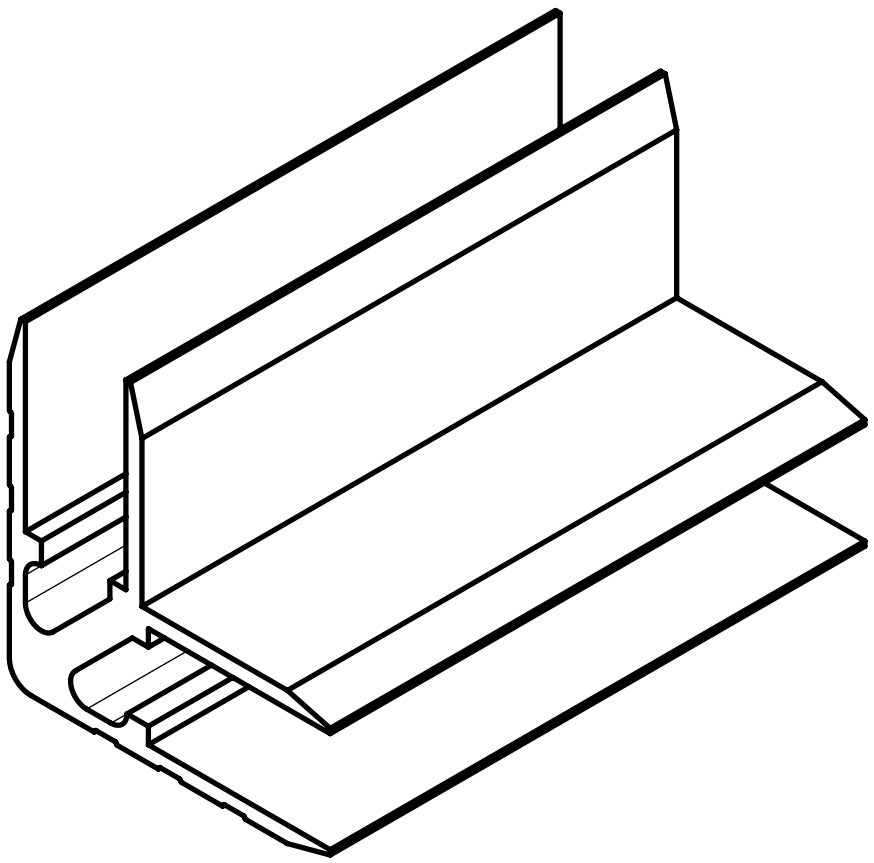
6107A