ALTAIR
Technical Equipment
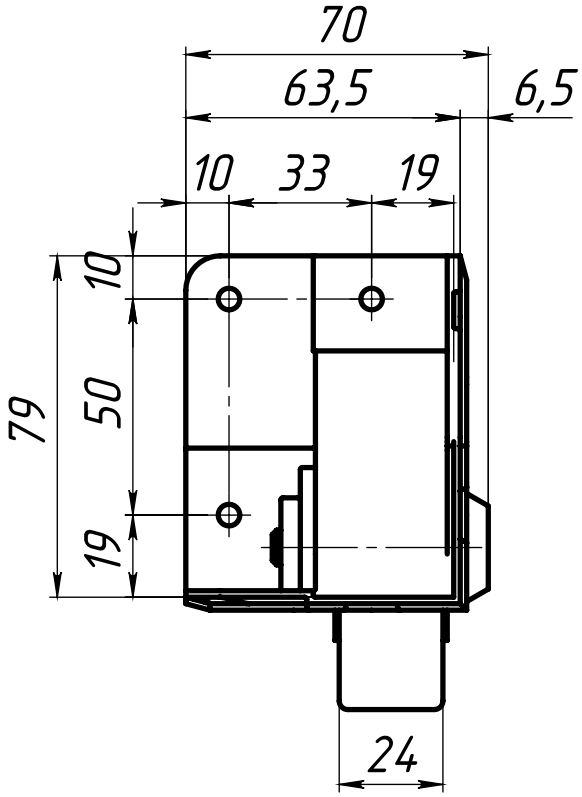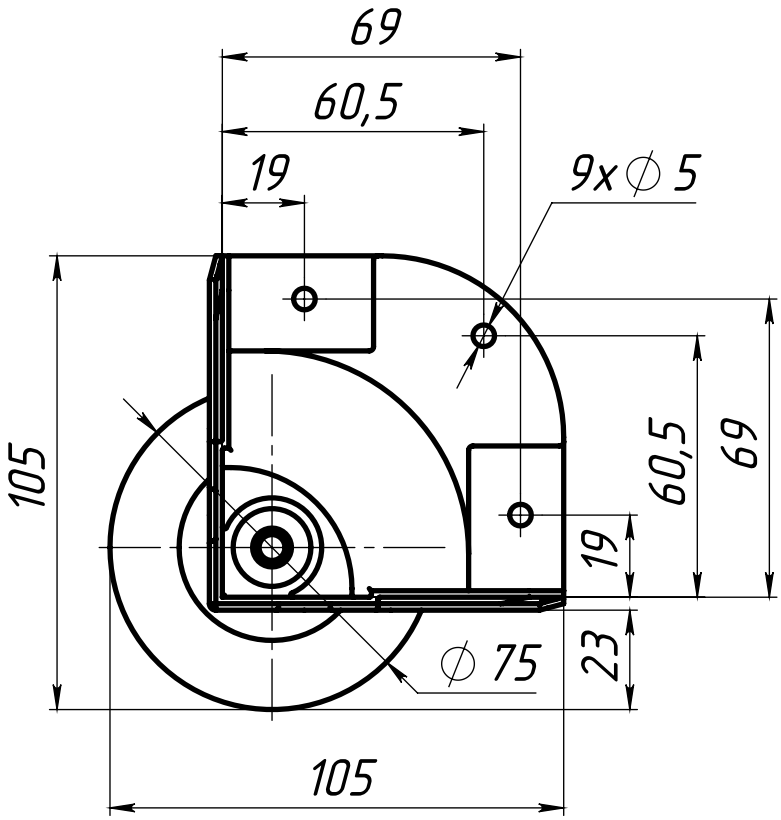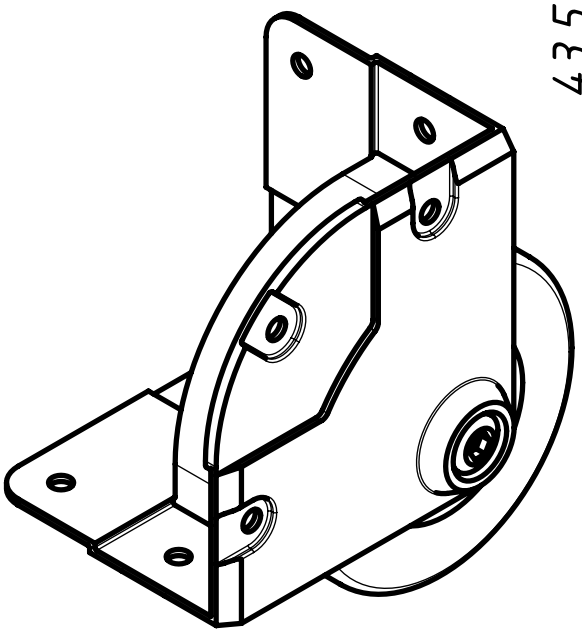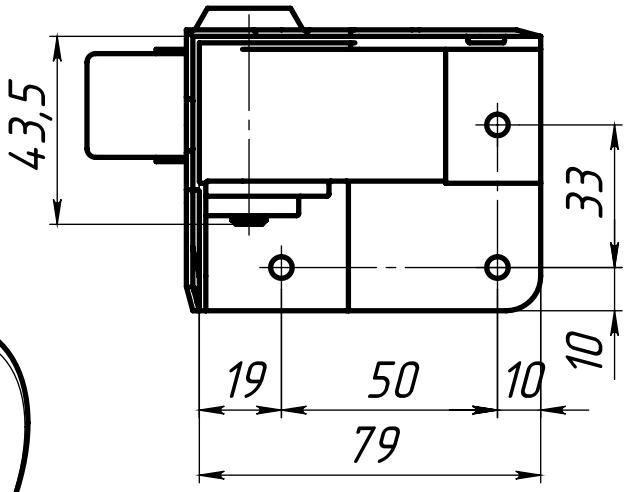
W6171